M2M - IMT matters

Didier Chauveau
ECC PT1 Chairman

Machine 2 Machine Workshop
Mainz - Germany , 21-22 March 2016

ECC PT1 within ECC

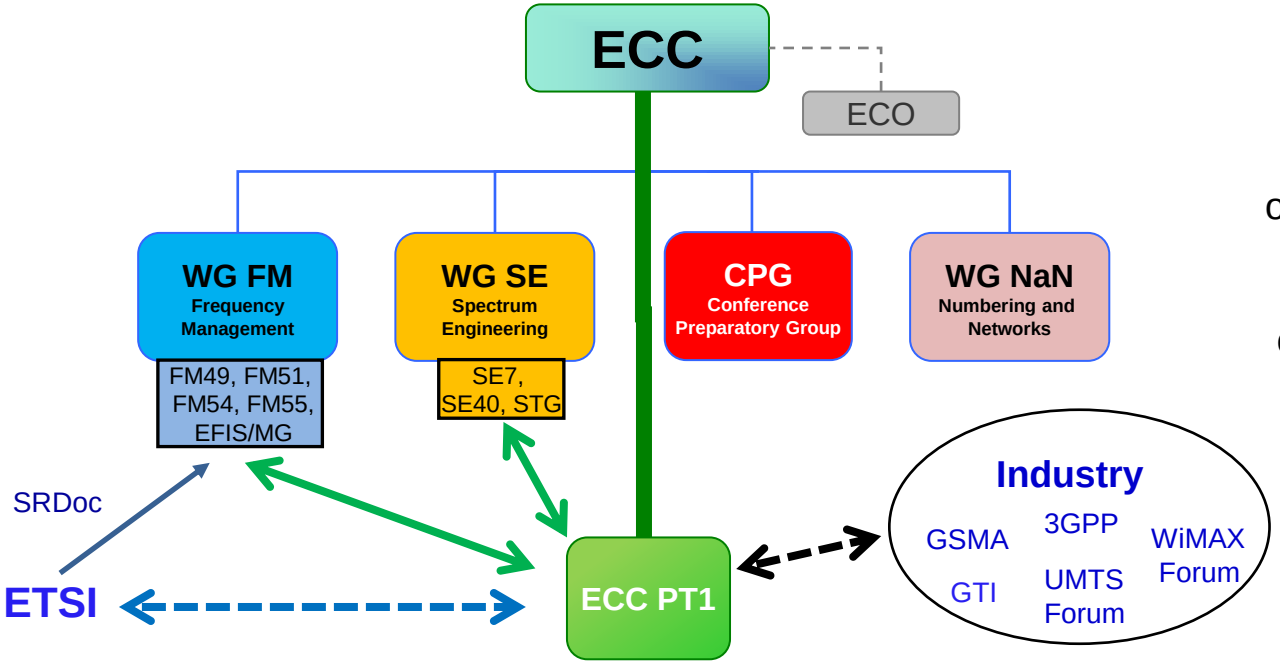

ECC PT1 main activities

Harmonisation measures
on MFCN, MCV, MCA, DECT

Recommendations
on cross border coordination

CEPT Reports in response
to EC mandates

Inputs to ITU-R WP 5D
on IMT matters (terrestrial)

ECC PT1 already works on **IMT 2020**

More info
ECC PT1 web page
ECC PT1 Terms of Reference
List of relevant Deliverables
ECO report 03

ECC PT1 will draft
the CEPT position on
AI 1.13 for WRC 19 (IMT 2020>24 GHz)
(to be confirmed by the next CPG)

IMT Matters and standardisation

Some frequency bands are identified as IMT in the Radio Regulation (RR)

International Mobile Telecommunications (IMT) =
IMT-2000 + IMT-Advanced (3G and 4G) + IMT 2020 (5G)

Specifications for mobile systems

UMTS, LTE, LTE advanced
and future mobile systems

ETSI is also responsible for the development of Harmonised Standards
for radio equipment under the **RED** (2014/53/EU)
in response to the EC standardisation requests (mandates)

1210 MHz of harmonised spectrum (ECC framework)

Band	Size (MHz)	ECC framework (main deliverables)
700 MHz (694- 790 MHz)	2x30 + 20 (option 0 to 4 blocks of 5 MHz) (SDL)	ECC DEC(15)01
800 MHz (790-862 MHz)	2x30	ECC DEC(09)03
900 MHz (880-915 MHZ /925-960 MHz)	2x35	ECC DEC(06)13
1452-1492 MHz	40 (SDL)	ECC DEC(13)03
1.8 GHz (1710-1785 MHz/1805-1880 MHz)	2x75	ECC DEC(06)13
2 GHz (1920-1980MHz/210-2170 MHz)	2x60	ECC DEC(06)01
2.3-2.4 GHz	100	ECC DEC(14)02
2.6 GHz (2500-2690 MHz)	2x70+50	ECC DEC(05)05
3.4-3.8 GHz	400	ECC DEC(11)06
	Total : 1210 MHz	

For more details – see list of relevant ECC PT1 deliverables

Harmonised Spectrum for Mobile Systems in Europe

ECC Decisions on MFCN

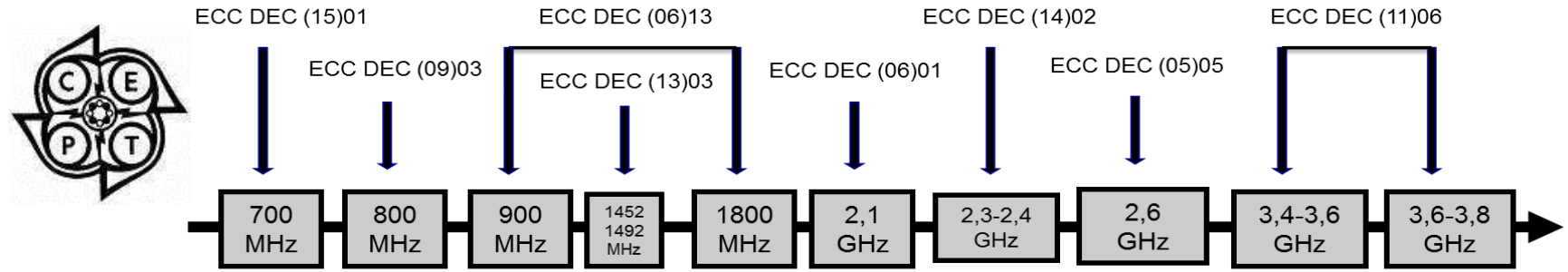

EC Decisions on ECS

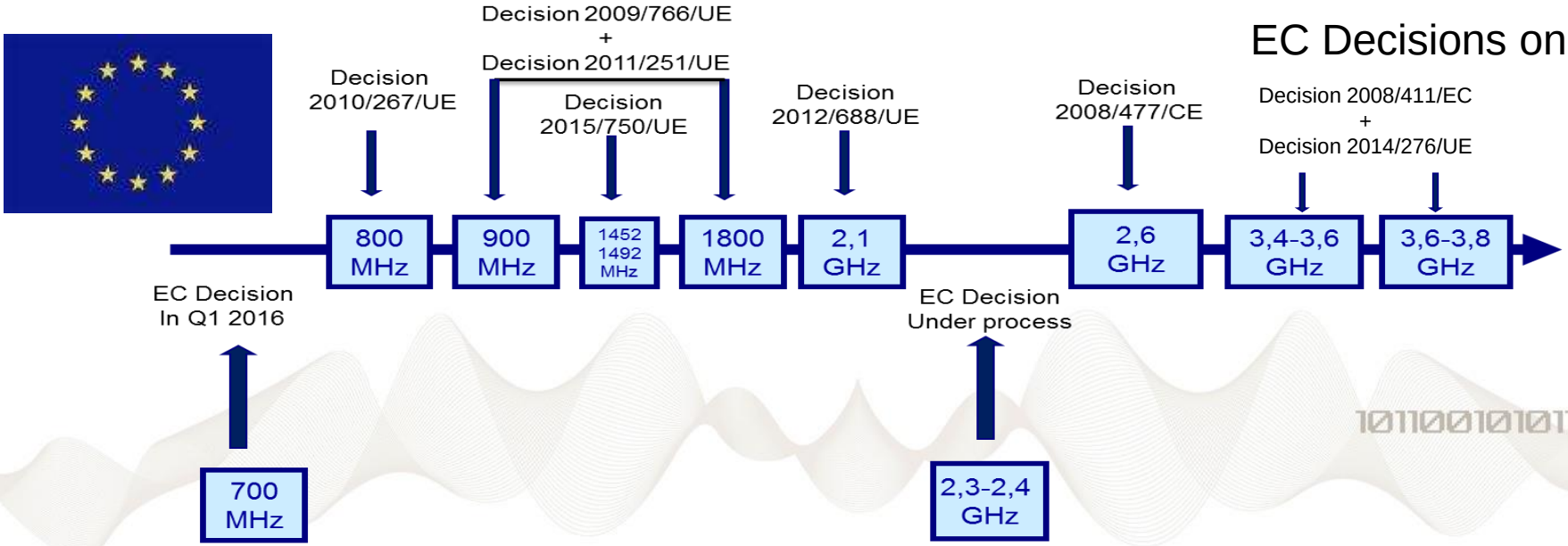

Machine 2 Machine

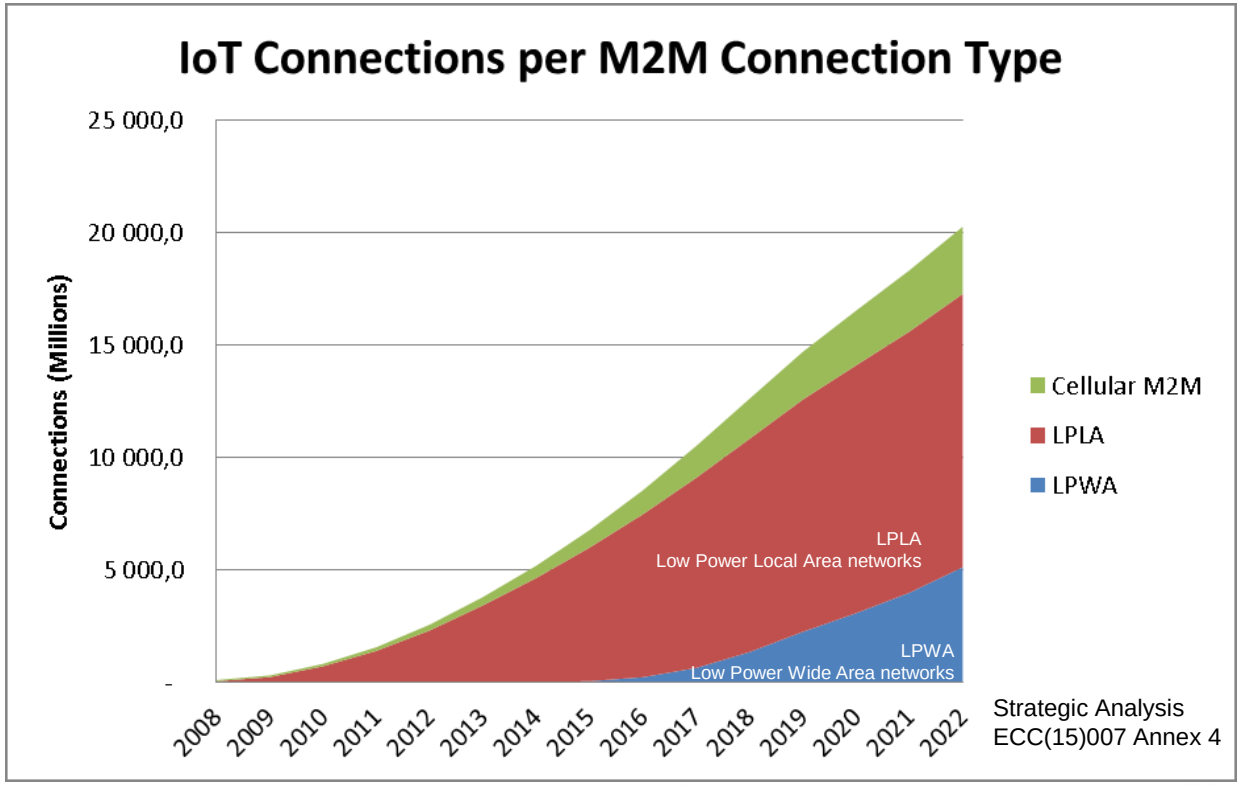

All M2M
market size analysis reports
are forecasting
a **fast growth in M2M traffic**

M2M Traffic is (will be)
partly carried by systems
using
Short Range Device
spectrum

Also by **cellular networks** using licensed mobile frequency bands

Today's M2M applications in harmonised MFCN bands

Assumed Technology	Frequency band (MHz)
LTE	700
LTE	800
GSM, UMTS, LTE	900
GSM, LTE	1800
UMTS, LTE	2100
LTE	2300
LTE	2600

Harmonised bands for MFCN

« Legacy » M2M like GSM (GPRS)
and
other « IP connectivity M2M services » based on UMTS (3G) and LTE (4G)

Targeted sectors and applications by licensed operators (see mobile operators web sites)
Automotive, Banking, Finance, Insurance, Energy and Utilities
Manufacturing, Transportation, Retail, e-Health, Smart cities, etc.

Will there be an impact on future « GSM switch off » ?

700 MHz (2x 3 MHz)

M2M in the 733-736 MHz / 788-791 MHz band

LTE-based M2M and Narrowband M2M

Bands	694-698	698-703	703-733	733-736	736-738	738-743	743-748	748-753	753-758	758-788	788-791	791-821
PPDR 2x3 MHz			UL MFCN Band 28	UL PPDR						DL MFCN Band 28	DL PPDR	DL MFCN Band 20
PPDR 2x5 MHz		UL PPDR							DL PPDR			
M2M 2x3 MHz				UL M2M							DL M2M	
SDL 4x5 MHz						DL MFCN SDL						
PMSE	PMSE			PMSE								
Block Size [MHz]	4	5	30	3	2	5	5	5	5	30	3	30

Compatibility studies with MFCN SDL, MFCN 700/800, PMSE, PPDR

ECC report 242

No further actions from ECC

New M2M solutions

New IoT (M2M) challenges

Battery (Low Power) + “low” Cost + Range (Wide Area)

LTE M2M

GSM M2M

NB-IoT

(200 kHz bandwidth)

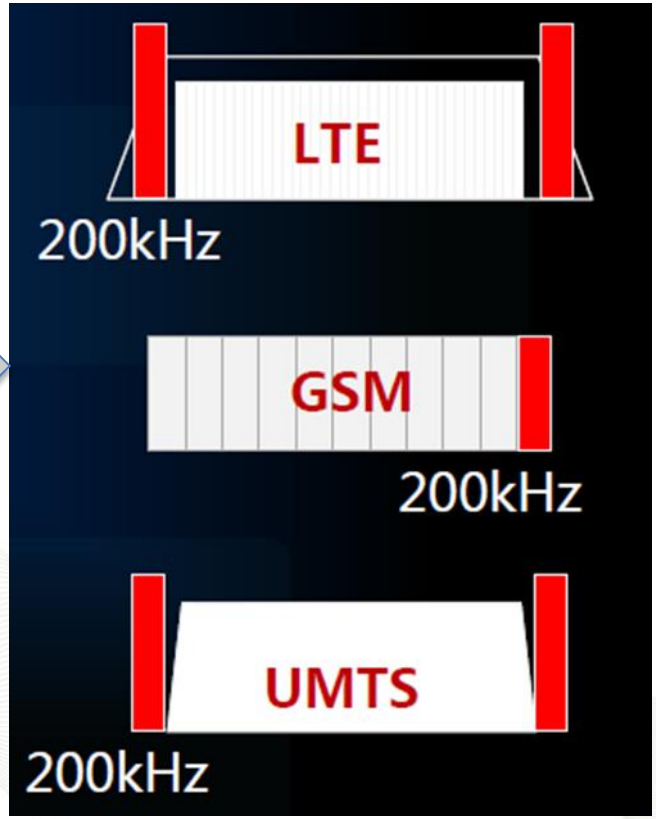

A new Work Item in ECC PT1

“To study the suitability of the current technical conditions of harmonised MFCN bands for LTE-based M2M and NB M2M”

5G at the top of the agenda

5G should address various ‘challenging’ needs

xMBB = Very High Mobile Broadband = very large bandwith

MTC Machine 2 Machine Communications

mMTC Massive M2M Communications

uMTC Ultra Reliable
and Low Latency Communications

Possible spectrum ressources and M2M

Harmonised frequency bands (i.e. 700 MHz, 3,4 – 3,8 GHz)

MTC ? **xMBB ?**

Future frequency bands to be harmonised in Europe : L band, ...

Frequency bands under study under WRC 19 AI 1.13

xMBB **MTC ?**

24,25-27,5 GHz 31,8-33,4 GHz 37-43,5 GHz

45,5-50,2 GHz 50,4-52,6 GHz

66-76 GHz 81-86 GHz

CEPT ECC
Electronic Communications Committee

For more information
ECC PT1 web pages

List of relevant ”IMT” deliverables
ECC deliverables for review by ECC PT1
ECC PT1 Work Program